EGR 215 - Laboratory 3 - Operational Amplifiers (Op Amps)

Authors

C. Ramon, R.D. Christie, K.F. Böhringer of the University of Washington

Objectives

At the end of this lab, you will be able to:

- Construct and test inverting and non-inverting op amp circuits
- Compute the input and output resistance of op amp circuits from measurements.
- Design simple op amp circuits

Materials and Supplies

See Laboratory 1 for information on obtaining a laboratory parts kit and multimeter, and for identifying many of the parts used in Laboratory 3.

Parts for This Lab

The new part used in this lab is the *LM741 Op Amp*. It is the small 8-legged black plastic bug-like thing. This component form, or package, is called an 8-pin Dual Inline Package, or DIP. DIPs of different sizes (pin counts) are used for many types of integrated circuits. The op amp for this lab may be marked LM741 or HA17741, and may be from National, Hitachi, or another manufacturer.

The number 741 indicates the basic functionality of the part, e.g. op amp, inverter, or AND gate. 741 is a general purpose operational amplifier.

Letters and numbers preceding 741 indicate the type of process used to make the component, e.g. CMOS or TTL. Letters following 741 usually indicate the package type, e.g. plastic, ceramic, DIP or surface mount.

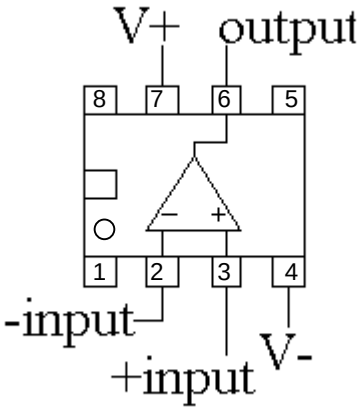

Figure 1 - LM741 pin out (top view)

The op amp may be marked with a dot in one corner of the top, or a notch in one end, or both. Pin 1 is at the corner with the dot. Pin 1 is the pin in the corner to the left of the notch, looking down. Pin numbering runs counter-clockwise from pin 1. Looking down on the op amp, with pin 1 in the upper left corner, pin 4 is in the lower left corner, pin 5 in the lower right corner, and pin 8 in the upper right corner. See the pinout in Figure 1. Note that the op amp symbol is NOT printed on the package.

Data sheets can be found at www.national.com and other IC manufacturer sites. Use the part number, LM741, to search.

Laboratory Procedures, Measurements and Questions

Record your data and the answers to questions on a separate sheet (or sheets) of paper and hand it in at recitation section when the lab is due. You will also have to bring your breadboard with designated circuits on it to your recitation section the week the lab is due.

Procedure 1: Inverting Amplifier (30 points)

Construct the circuit of figure P1-1.

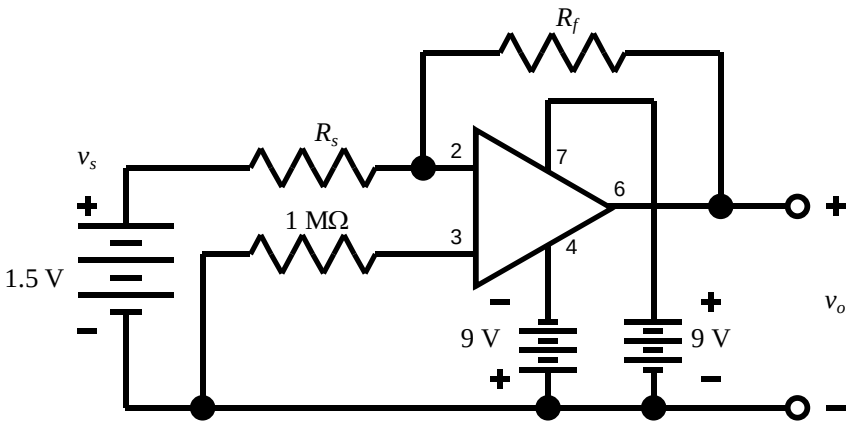

Figure P1-1 Inverting amplifier.

Notes: This circuit diagram uses the convention that when wires cross, a dot indicates an electrical connection, and no dot means no connection. The small numbers near the triangle are the op amp pin numbers.

The op amp should straddle the trough in the center of your breadboard, with pins 1-4 inserted into the inner end holes of four different (unconnected) rows on one side of the trough, and pins 5-8 inserted into the inner end holes of four different rows on the other side of the trough.

Refer to the pinout in Figure 1 for op amp pin identification.

The op amp pins usually sit a little wider than the breadboard holes. To put the op amp into the breadboard, loosely set all the pins from one side into the desired holes in the breadboard. Then push in on all of the pins on the other side while also pushing gently down on the op amp body until all of these pins are loosely in their holes as well. Check to be sure that all of the pins are in their holes, and none are curled under the op amp body. The body should be sitting level over the breadboard. Now push firmly straight down on the body to insert the pins all the way. The body should sit right down on the breadboard surface.

When removing the op amp, pull straight up on both ends simultaneously, and rock the package gently back and forth. The object is to move the op amp straight up and not bend any pins while pulling it. You can lever the ends a little at a time, alternating ends, using a small screwdriver or the adjustment tool in your kit. Purists might want to buy an IC puller which hooks under the ends and pulls both up at the same time.

1.a (20 points) Use the circuit of Figure P1-1 to fill out Table P1-1.

For each combination of resistor values, use the ideal op amp model and nominal (not measured) resistances to calculate the expected gain, and fill out the appropriate column. These are the design time resistance values.

Then insert each combination of resistor values in the circuit of Figure P1-1 and measure the battery (source) voltage, v_s, and the output voltage v_o. Compute measured gain as output over input, or v_o/v_s.

Finally, compute percent error as in Laboratory 1, but using the absolute values of the gains.

Table P1-1 Inverting Amplifier Gain Measurement

R_s	R_f	Calculated gain	Measured gain	% error
4.7 KΩ	4.7 KΩ			
4.7 KΩ	8.2 KΩ			
1.5 KΩ	4.7 KΩ			
1.5 KΩ	8.2 KΩ			

1.b (5 points) Use the resistances from the first line of Table P1-1 in the circuit of Figure P1-1. Find the Thévenin equivalent resistance seen by the output of the circuit by measuring the open circuit voltage, and then measuring the output voltage with a resistance across the output. Do NOT short circuit the output. Use a minimum of 1 KΩ resistance. Compute the maximum possible

value of the Thévenin equivalent resistance considering meter accuracy. Compare with the 1.5V battery Thévenin equivalent found in Laboratory 2. Which is a better voltage source?

1. c (5 points) Use the resistances from the first line of Table P1-1 in the circuit of Figure P1-1. Find the Thévenin equivalent resistance seen by the input. Measure the voltage and current at the input. Then add a 1 KΩ resistor in series with the battery and again measure voltage and current at the input. Use this data to find the to the Thévenin equivalent. Calculate the nominal Thévenin equivalent input resistance, assuming an ideal op amp, and compare to your measured value.

Procedure 2: Non-Inverting Amplifier (30 points)

Construct the circuit of figure P2-1.

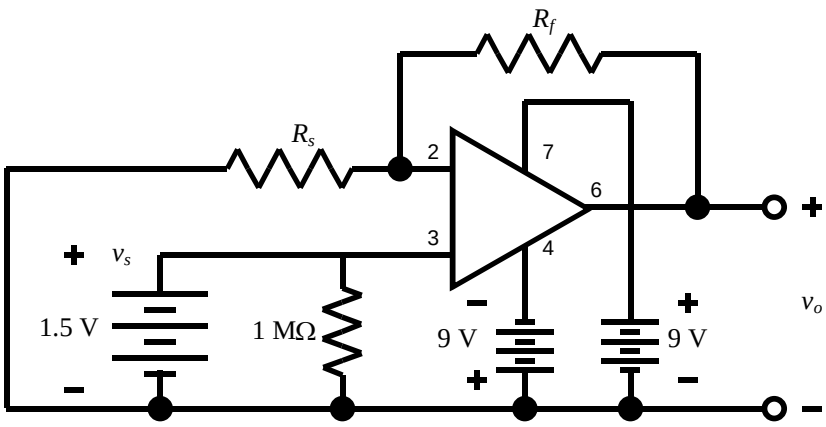

Figure P2-1 Non-Inverting amplifier.

2.a (20 points) Use the circuit to fill out Table P2-1, using the same process as in step 1.a.

Table P2-1 Non-Inverting Amplifier Gain Measurement

R_s	R_f	Calculated gain	Measured gain	% error
4.7 KΩ	4.7 KΩ			
4.7 KΩ	8.2 KΩ			
1.5 KΩ	4.7 KΩ			
1.5 KΩ	8.2 KΩ			

2.b (10 points) One of the resistor combinations in Table P2-1 has an error significantly higher than the others. Why? (Hint: How does the output voltage compare to other voltages in the system?) (Comment: If you already included this effect in computing calculated gain, and thus do not have one error higher than the others, explain how you included it!)

Procedure 3: Op Amp Design (40 points)

3.a (25 points) Design and construct a summing amplifier to implement the equation

$$v_o = -(0.25 \cdot v_a + 0.4 \cdot v_b)$$

where v_a and v_b are inputs to the circuit and v_o is the output voltage.

Use R_f = 10 KΩ. Use the resistors provided in your lab kit. (You may use multiple resistor combinations.) Provide a circuit diagram (schematic) showing your design. Explain how you computed the circuit values. Show mathematically that your circuit values result in the desired equation. Bring your circuit to class and demonstrate it to your instructor. If you do not show your circuit to the instructor, you will be penalized.

3.b (10 points) Use your circuit to fill out table P3-1. Attach the inputs to the power supply voltages, the neutral, or use the 1.5 V battery as necessary to obtain the desired input voltage values. Measure and record the input voltages (Meas). Use the measured inputs (Meas) to calculated the nominal output voltages v_o (calculated). Then measure the output voltage v_o and record the value in the v_o (measured) column. Calculate % error as previously described.

Table P3-1 Summing Amplifier Results

v_a	*Meas*	v_b	*Meas*	v_o **(calculated)**	v_o **(measured)**	**% error**
9.0 V		1.5 V				
-9.0 V		-9.0 V				
1.5 V		0 V				
1.5 V		9.0 V				
0 V		-1.5 V				

3.c (5 points) Use your circuit diagram (nominal values) to make a plot showing the valid range of v_b as a function of v_a.